LOKOMA

User Manual
Set-up Instructions

System Workbenches SWB and Slim Line SWB-SL

Bitte vor dem Aufstellen und vor Erstbeladung beachten!
Achtung Kippgefahr!
Werkbank mit einem der Bodenbeschaffenheit entsprechenden Befestigungsmittel gegen Kippen sichern!
Entsprechende Bohrungen sind in den Werkbankfüßen und den Schrankböden vorgesehen.

Please pay attention to the following instruction!
Caution! Tipping over danger!
Secure Cabinet with a fastening device corresponding to the condition of the floor from tipping over!

Règle à respecter lors du montage de votre armoire lourde!
Attention! Danger de basculement!
Sécuriser l'armoire contre tout risqué de basculement accidental avec un dispositif de fixation adapté aux contraintes du sol.
Des trous de fixation sont prévus a cet effet sur le dessous de l'armoire!

Bolt the workbenches to the floor or wall! Tipping hazard!

For maximum load per drawer, see the load chart in this user manual and the stickers in the drawer!

For maximum load per shelf support and shelf insert, see load chart.

For the maximum permissible surface pressure, see the table in this user manual!

The cabinets must be set on a level surface at the location of use! If necessary, level the cabinets using Lokoma base plates designed for this purpose and set the cabinets plumb!

Be aware of the maximum load index when loading all workbench components! Always be sure to load equally!

Transport workbenches only with the doors and extensions locked!
When transporting with a pallet truck, the front side of the workbench must always point toward the shaft.

Do not climb on open drawers or storage shelves! Do not sit on drawers! Tipping hazard!

<u>Additional instructions for mobile workbenches</u>

Due to the tipping hazard, workbenches with drawers may not be retrofitted with castors.

Always push mobile workbenches with both hands. Beware of uneven and sloping paths — tilting hazard!

Workbench Load Capacity

The load capacity of the workbench applies to evenly distributed static loads.

Type	Plate thickness [mm]	Plate width [mm]	Load Multiplex [kg]	Load solid beech [kg]		Plate width [mm]	Load Multiplex [kg]	Load solid beech [kg]
	50 40 30	700	1500 1500 1500	1500 1500 -		-	-	-
	50 40 30	1500	450 400 350	300 250 -		2000	450 400 350	300 250 -
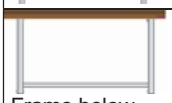 Frame below	50 40 30	1500	850 800 750	500 450 -		2000	850 800 750	500 450 -
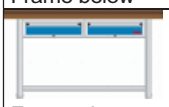 Frame above and below	50 40 30	1500	1200 1100 1000	1200 1100		2000	1000 900 800	1000 900 -
 Cabinet 800 in height	50 40 30	1500	1000 900 800	800 700 -		2000	1000 900 800	800 700 -
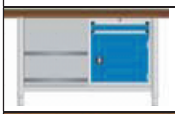	50 40 30	1500	1800 1700 1600	1800 1700 -		-	-	-
	50 40 30	1500	2500 2500 2500	2500 2500 -		-	-	-
	50 40 30	2000	1500 1500 1500	1300 1300 -		-	-	-
	50 40 30	2000	1700 1700 1700	1700 1700 -		-	-	-
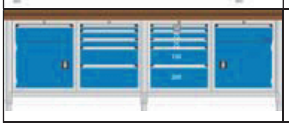	50 40 30	2500	3500 3500 3500	3500 3500 -		-	-	-

Shelf Support and Shelf Insert Load Capacity

The load capacity of the shelf support and shelf insert for evenly distributed static loads.

Shelf type	Cabinet model	Width (mm)	Depth (mm)	Total load (kg)
Shelf support	RS 440	379	515	50
In the cabinet	RS 576	515	512	50
	RS 565	505	610	50
Shelf insert	RS 576	574	324	50
Between the cabinets	RS 576	574	605	50

Drawer and Cabinet Body Load Capacity

The load capacity of the drawers and cabinet body are valid for evenly distributed static loads.

Cabinet model	Cabinet width (mm)	Cabinet height (mm)	Standard extension (kg)	Full extension (kg)	Cabinet housing Total load capacity (kg)	Average dead weight with 7 empty drawers (kg)
RS 440	440	625	90	100	1500	60
	440	800	90	100	1500	70
RS 576	576	425	90	100	1500	45
	576	625	90	100	1500	70
	576	800	90	100	1500	80
	576	1000	90	100	1500	90
RS 565	565	425	100	200	1500	45
	565	625	100	200	1500	70
	565	800	100	200	1500	80
	565	1000	100	200	1500	90

Workbench Permissible Surface Pressure

The stated workbench permissible surface pressure applies in the worst-case scenario that there is a minimum floor space and maximum load.

Workbench model System workbench	Floor space with 4 feet (mm^2)	Maximum load (kg)	Maximum permissible surface pressure (N/mm^2)
Square tube feet	14000	2500	1.8
Levelling screw	5024	1650	3.28

Moving the Workbench

- Before you start to move the workbench, ensure that all covers and doors are locked tightly and cannot open independently.
- Push the workbench on the side of the product where the fixed castors are installed, if possible. This allows the workbench to be moved as ergonomically as possible.
- It is generally safer to push the workbench than to pull it, since you have a better view of potential obstacles and you do not have to turn your body.
- If the impact force exceeds 235 N when pushing or 165 N when pulling, 2 people must move the workbench.
- The castors' brakes for parking and braking the workbench on positive and negative gradients are designed for a maximum gradient of 5°.
- Gradients exceeding 5° generally should not be negotiated with the workbench.

Frame Assembly

Longitudinal frame

Position the frame between the workbench feet as shown. Secure the frame using the mounting materials provided. Ensure that the frame and screws are secured tightly.

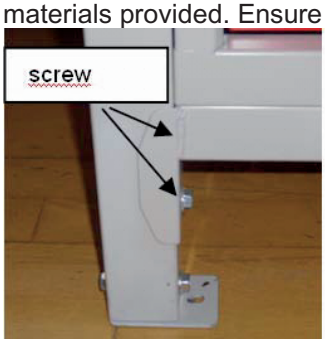


Latitudinal frame

Position the latitudinal frame between the workbench feet as shown. Secure the latitudinal frame on both sides of the workbench using the screws provided. Ensure that the frame and screws are secured tightly.

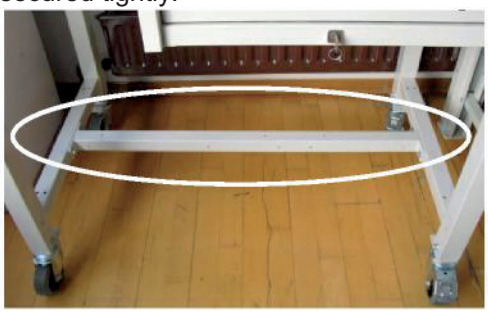
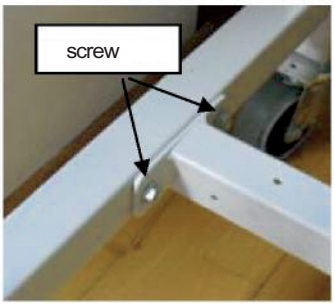

Using Base Plates

To balance out unevenness in your floor and to prevent the workbench from wobbling, please use the base plates from our product range. Slide the base plates from the side under the foot or corner of the cabinet that is not touching the ground. The base plate should not protrude if fitted correctly. Please bolt the workbench or cabinet to the floor. Appropriate holes have been provided.


before

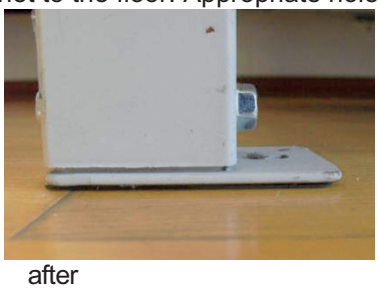
after

Installing Levelling Screws

To install levelling screws, please enlist the help of a second person to place the empty workbench on its side. The feet are now easily accessible enabling you to insert the levelling screw from below through the appropriate holes. You can then tighten the screw using the nuts provided.
Static payload / adjustment screw for levelling = 550 kg ►1650 kg overall max. static load of the workbench.
The payload values of the chart on page 3 may not be exeeded.

Installing Castors

Castors may only be installed on workbenches without drawers.
To install the castors, please enlist the help of a second person to place the empty workbench on its side.
The feet are now easily accessible and relieved of pressure, allowing you to install the castors using the screws and nuts provided. Please install the swivel castors on one of the narrow sides of the workbench.
The usage of castors results to the following static overall max. load of the workbench:
450 kg with a 100 mm diameter castor, 750 kg with a 125 mm diameter castor.
The payload values of the chart on page 3 may not be exeeded.

Adjusting Workbench Height

To adjust the height of the workbench, please place the empty workbench on its backside. Loosen the height adjustment screws. Adjust the workbench to the desired height and tighten the screws again. Ensure that all feet are set to the same height.

Intended use

When in doubt about use, operation or set-up, please consult Lokoma GmbH.

System workbenches are suitable for all types of assembly and repair work. System workbenches are not suitable for storing unpackaged foods and hazardous materials.

When transporting system workbenches or mobile system workbenches in utility vehicles, the drawers must be built in with individual locking in addition to central locking.

Individual Drawer Interlock

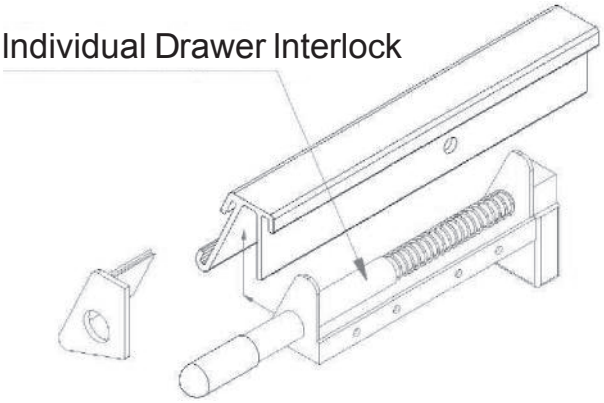

Product Suitability

It is important that you work in appropriate locations only, since an incorrect body posture or lack of working space can damage your health.
The optimal location for standing to work, for example, is an area where there are no floor cabinets or where a vice protrudes beyond the edge of the work surface.
You should only work in a permanent sitting-down state at the workbench if legroom is not impaired; for example, where a latitudinal frame has not been fitted.

Default values:

Activity	Legroom width (mm)	Legroom depth at knee height (mm)	Foot space depth (mm)	Foot space height (mm)
Short-duration sitting	minimum 600	minimum 547	minimum 700	-
Sitting	minimum 790	minimum 547	minimum 800	-
Standing	-	minimum 80	minimum 150	120

Central locking function

Turning the key rightward 180° releases all the drawers. If any drawer is pulled out, all other drawers are locked by the locking rod (pull-out lock). After the drawer is slid back in, all drawers are released again, and any other drawer can be pulled out. Turning the key leftward 180° locks all drawers (the whole cabinet).

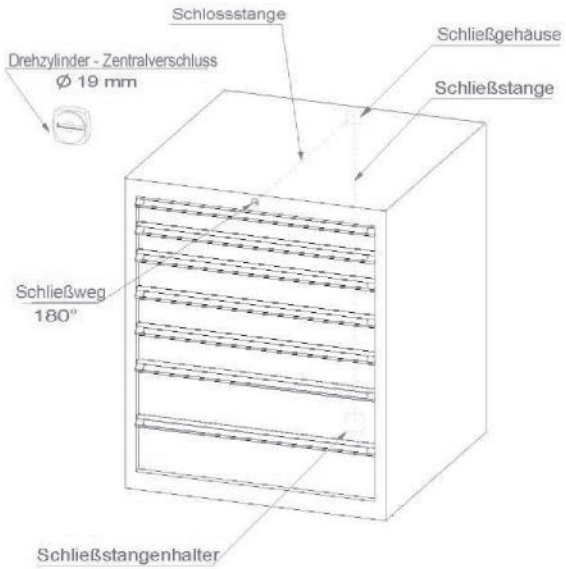

Troubleshooting the lock system

If the locking rod has become worn, or the grid springs have become weak or broken, you can order new ones. Installation and removal are described on page 7.
Before removal, secure the drawers (e.g. with tape) and unload them from top to bottom.

Removing standard-extension drawers

Pull the drawer out to the stop. Lift gently forward and pull it out entirely. Turn the cylinder lock key 180° in the locking direction (open / lock position). Remove the next drawer. Repeat this process for all of the drawers.

Removing full-extension drawers

Pull the drawer out to the stop, as in the last case. Lift gently forward and pull it out entirely. Engage the cylinder lock.
To install, perform steps 1 and 2 in reverse order.

Changing the guide rails, standard to full extension

Drill out the 2 sets of 3 blind rivets with a 0.4 mm bit and remove the standard-extension guide rails.
Install the full-extension guide rails and rivet them in laterally with two 4 x 8 mm blind rivets.

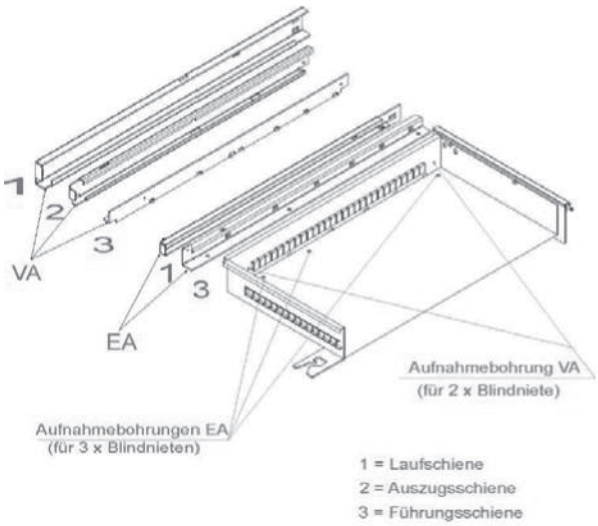

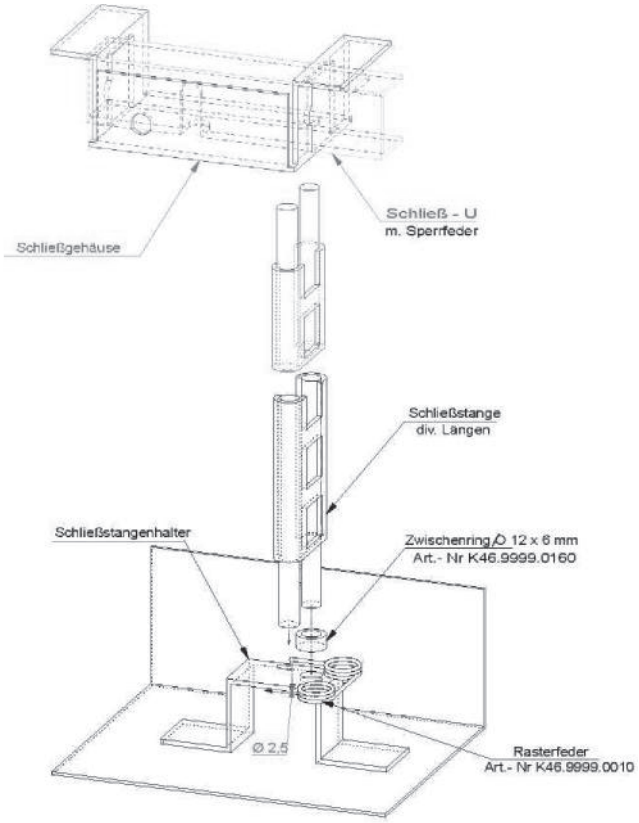

Betriebs- und Lagertechnik
Lokomastrasse 1
89420 Höchstädt Germany
Tel.: +49 (0) 9074/95 07 -0
Fax.: +49 (0) 9074/95 07 -11
www.lokoma.de